DISHWASHER QUICK START GUIDE

Dishwasher Operation

CONTROL PANEL

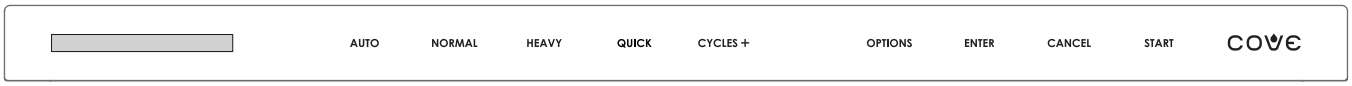

Control panel

For complete information on the operation and maintenance of your Cove dishwasher, refer to the use and care guide.

WASH CYCLES

Setting a wash cycle:

1. Touch the desired wash cycle or touch Cycles+ multiple times to scroll to the desired wash cycle.
2. Touch Start and close the door within 4 seconds.

NOTE: To incorporate a cycle option to the wash cycle, touch Options before touching Start. To change the cycle after touching Start, touch Cancel.

Setting cycle options:

1. Select the desired wash cycle.
2. Touch Options.
3. Touch Options multiple times to scroll through cycle options.
4. Touch Enter to select the desired option and continue to touch Enter until the desired setting appears on the display.
5. Touch Options again to select additional options.
6. Touch Start and close the door within 4 seconds.

To interrupt a cycle:

1. Open the door.
2. To restart the cycle, touch Start and close the door within 4 seconds.

To cancel a cycle:

1. Open the door.
2. Touch Cancel and follow the instructions on the display.

SOIL LEVEL

CYCLE	SOIL LEVEL
AUTO	All
NORMAL	Normal
HEAVY, POTS & PANS, SOAK & SCRUB	Heavy, baked-on grime
PLASTICS*	Heavy/Light
LIGHT, QUICK, ENERGY, EXTRA QUIET	Light, freshly soiled
CHINA/CRYSTAL	Light, delicate

**Plastics can be cleaned in any cycle but drying performance is increased in this mode.*

STATUS LIGHT

The status light illuminates to indicate the status of the cycle.

LIGHT	CYCLE STATUS
Blue	A delayed start has been selected. Touch Start each time the door is opened prior to the start time.
Red	The cycle has started.
Green	The cycle is complete.
No Light	The door was not closed within 4 seconds after touching Start, the cycle has been complete for more than two hours, or the door has been opened.

DISHWASHER QUICK START GUIDE

Dishwasher Operation

USER SETUP

The user setup feature allows the user to select preferences as listed in the chart below.

USER OPTIONS

Language	Select language.
Water Hardness	Adjust water hardness setting.
Connect?	Turn connect on or off.*
Tone Level	Adjust tone level.
Notification	Turn end-of-cycle chime on or off.
Scroll Rate	Adjust display scroll rate.
Display Contrast	Adjust display contrast.
Display Brightness	Adjust display brightness.
Floor Light	Adjust status light brightness.
Rinse Aid Dosing	Adjust amount of rinse aid dispensed.
Showroom Mode	For showroom use only.
Reset All	Restore factory settings.

**To connect to the Sub-Zero Group Owners App, connect must be turned on.*

Setting user options:

1. Touch Cancel twice.
2. Touch and hold Options for approximately 3 seconds until “User Set Up” appears on the display.
3. Touch Options multiple times to scroll to the desired option.
4. Touch Enter to scroll or to select the desired setting.
5. Touch Cancel to exit user setup.

DISPENSER

The dispenser located on the interior of the door has one compartment for detergent and another for rinse aid. Refer to the illustrations.

NOTE: Always use rinse aid even if the detergent includes rinse aid.

To add dishwasher detergent:

1. Add detergent to the compartment on the left.
2. Slide the cover closed.

To open the door once closed, touch the button on the side of the dispenser.

To add rinse aid:

1. Lift the tab of the cover on the right.
2. Add rinse aid. The rinse aid compartment is full when the indicator appears the color of the rinse aid.
3. Wipe away any rinse aid that may have spilled.

When rinse aid is low, “Add Rinse Aid. Enter once added, Cancel to ignore.” appears on the display.

⚠ CAUTION

Do not add anything other than dishwasher detergent to the detergent compartment and rinse aid to the rinse aid compartment.

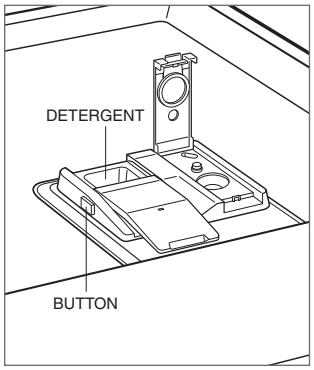

Detergent dispenser

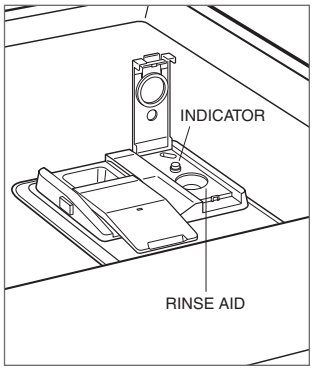

Rinse aid dispenser

WATER SOFTENER

For water softener models only, a salt compartment is located at the bottom of the interior. Refer to the illustration. Prior to filling the salt compartment for the first time, fill the compartment with water. Water does not have to be added with subsequent refills.

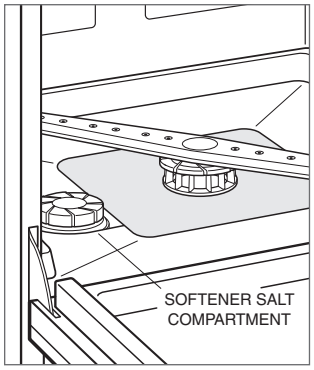

Softener salt compartment