36" CLASSIC REFRIGERATOR

CL3650R/S

FEATURES

Legacy product image shown; actual product varies slightly.

Split Climate™ intelligent cooling system revolutionizes Sub-Zero's already-superior preservation capabilities, keeping food even fresher for longer

ClearSight™ LED lighting system fully illuminates the interior and reduces shadows

Sleek stainless accents trim the interior, matching the sophistication of the exterior

Touch control panel is conveniently located for easy access at the tap of a finger

Night Mode optimizes the interior lighting based on the detected ambient light, reducing the brightness by 90% in dim environments

Lift the base of the flip-up dairy compartment to store taller items on the shelf below

Position adjustable door bins at various heights to accommodate assorted items

Wi-Fi enabled for convenient remote access using the Sub-Zero Group Owner's App

Stainless-steel exterior and tubular or pro handles to match other Sub-Zero, Wolf, and Cove products

Sub-Zero offers an industry-leading full two-year warranty on appliances, along with a full five-year sealed system warranty

ACCESSORIES

90° Door Stop

Dual Installation Kit

Egg Container

Stainless Steel Flush Inset Grille Panel

Dual Installation Kit with Dual Wide Grille

Stainless Steel Kickplate

Accessories are available through an authorized dealer.
For local dealer information, visit subzero-wolf.com/locator.

HANDLE OPTIONS

PRO

TUBULAR

PRODUCT DETAILS

REFRIGERATOR

- 5 glass refrigerator shelves (4 adjustable; 1 stationary)
- 4 crisper drawers with removable dividers
- 5 refrigerator door bins (3 adjustable; 2 stationary)
- 1 flip-up dairy compartment
- Air purification system
- LED refrigerator lights

Specifications are subject to change without notice. This information was generated on April 19, 2024. Verify specifications prior to finalizing your cabinetry/enclosures.

PRODUCT SPECIFICATIONS

Model	CL3650R/S
Dimensions	36"W x 84"H x 24"D
Refrigerator Capacity	22.8 cu. ft.
Weight	512 lbs
Electrical Supply	115 VAC, 60 Hz
Electrical Service	15 amp dedicated circuit
Receptacle	3-prong grounding-type

ELECTRICAL

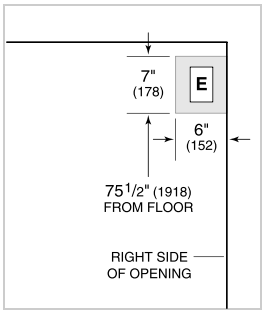

NOTE: Dimensions in parenthesis are in millimeters unless otherwise specified

INTERIOR VIEW

This illustration is intended for interior reference only and may not represent the exterior of the model being specified.

DIMENSIONS

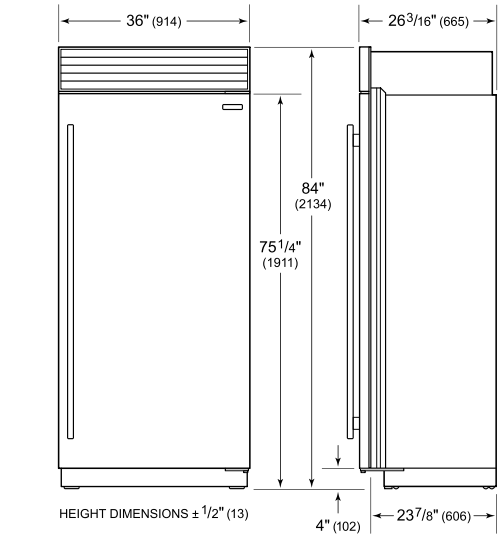

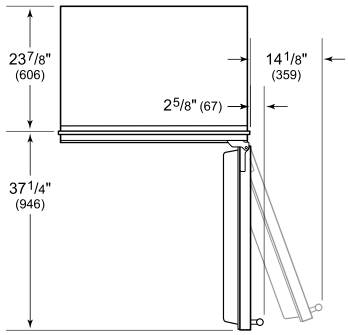

STANDARD INSTALLATION

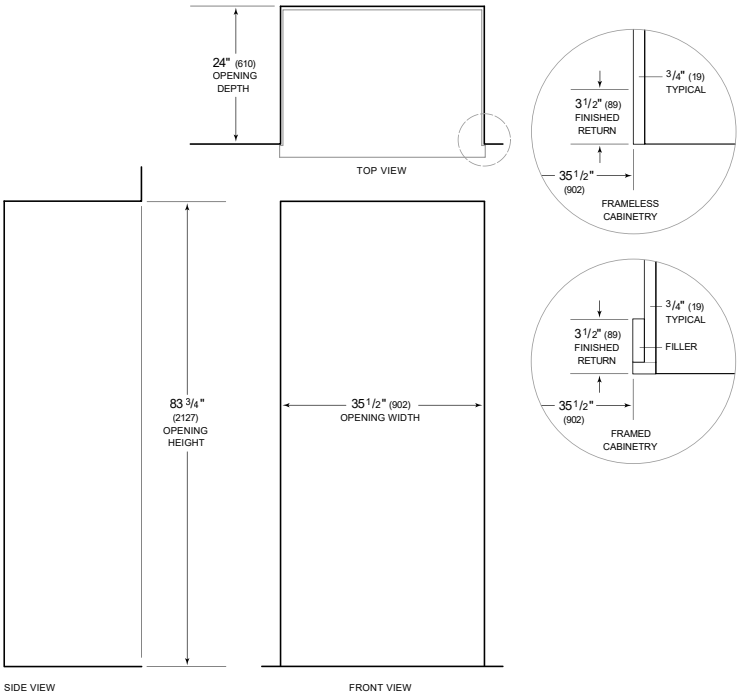

NOTE: 3 1/2" (89) finished returns will be visible and should be finished to match cabinetry
Shaded line represents profile of unit.