LEGACY MODEL - 36" CLASSIC FRENCH DOOR REFRIGERATOR/FREEZER - PANEL READY

BI-36UFD/O

FEATURES

- Monitor and control remotely with Wi-Fi connectivity
- Accepts custom panels for an integrated look within cabinetry or stainless-steel accessory panels and handles to match other Sub-Zero, Wolf, and Cove products*
- Preserves refrigerated foods with cool, moist air and frozen foods with frigid, dry air
- Fight spoilage and odors with a NASA-inspired air purification system
- Locks in cold air to ensure freshness with magnetic door seals
- Keeps produce fresher with high-humidity, sealed crisper and deli drawers
- Controls temperature within one degree of setpoint
- Filters ice, removing contaminants, chlorine taste, and odor
- Yields ice automatically and “max ice” for additional production
- Ensures excellent visibility with bright lights
- Refer to freshness cards for tips on food preservation, use, and care

ACCESSORIES

- 90° Door Stop
- Air Purification Cartridge
- Custom Side Panel Mounting Kit
- Egg Container
- Legacy 36" Stainless Steel Kickplate
- Legacy 45 3/16" Pro Handle
- Legacy Custom Front Panel Mounting Kit
- Legacy Grille Frame - 84"
- Legacy Pro Handle
- Legacy Pro Louvered Flush Inset Grille - 84"
- Legacy Stainless Steel Flush Inset Door Panel with Pro Handle
- Legacy Stainless Steel Flush Inset Door Panel with Tubular Handle
- Legacy Stainless Steel Flush Inset Drawer Panel with Pro Handle
- Legacy Stainless Steel Flush Inset Drawer Panel with Tubular Handle
- Legacy Stainless Steel Flush Inset Grille Panel
- Legacy Stainless Steel Pro Louvered Grille - 84"
- Legacy Stainless Steel Side Panel
- Water Filter
- Water Filter
- White Side Panel
- Stainless Steel Pro Handles
- Flush Inset Installation Accessories
- Framed Installation Accessories

HANDLE ACCESSORIES

PRO

TUBULAR

PRODUCT DETAILS

REFRIGERATOR

- 1 high-humidity crisper drawer with adjustable dividers
- 1 refrigerator storage drawers with adjustable dividers
- 2 adjustable dairy compartments
- 4 glass refrigerator shelves (3 adjustable; 1 stationary)
- 5 door bins (3 adjustable; 2 stationary)
- LED refrigerator and freezer lights

FREEZER

- 1 full-extension roll-out freezer drawer
- Automatic ice maker with removable ice container

Classic Overlay or Flush Inset Grille Frames

Classic Louvered Grilles

Accessories are available through an authorized dealer.
For local dealer information, visit subzero-wolf.com/locator.

Specifications are subject to change without notice. This information was generated on April 25, 2024. Verify specifications prior to finalizing your cabinetry/enclosures.

LEGACY MODEL - 36" CLASSIC FRENCH DOOR REFRIGERATOR/FREEZER - PANEL READY

PRODUCT SPECIFICATIONS

Model	BI-36UFD/O
Dimensions	36"W x 84"H x 24"D
Refrigerator Capacity	15.7 cu. ft.
Freezer Capacity	5.3 cu. ft.
Electrical Supply	115 VAC, 60 Hz
Electrical Service	15 amp dedicated circuit
Plumbing Supply	1/4" OD copper, braided stainless steel or PEX tubing
Plumbing Pressure	35–120 psi
Receptacle	3-prong grounding-type

ELECTRICAL

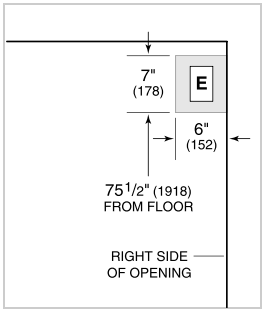

PLUMBING

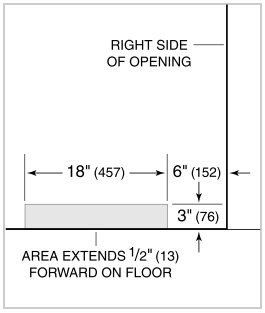

PANEL SPECIFICATIONS For complete panels specifications including width/height, weight requirements, thickness requirements and offset details visit subzero-wolf.com/builtinconfigurator.

NOTE: Dimensions in parenthesis are in millimeters unless otherwise specified

INTERIOR VIEW

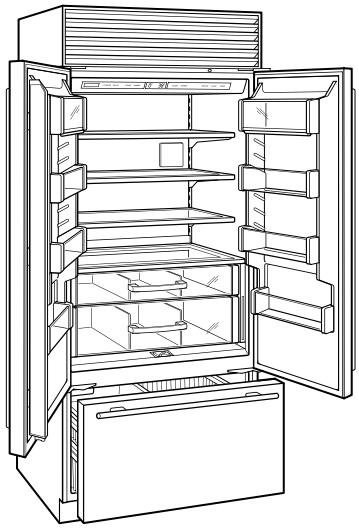

This illustration is intended for interior reference only and may not represent the exterior of the model being specified.

DIMENSIONS

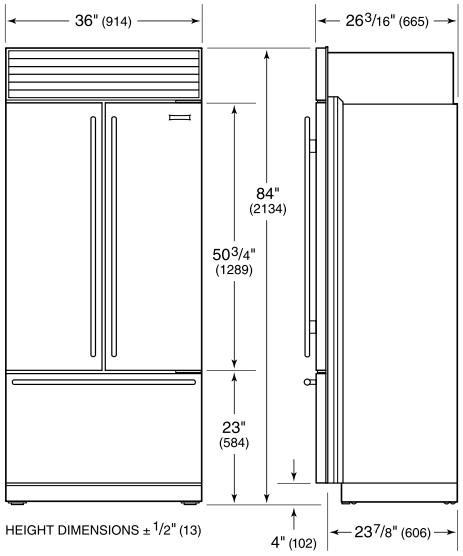

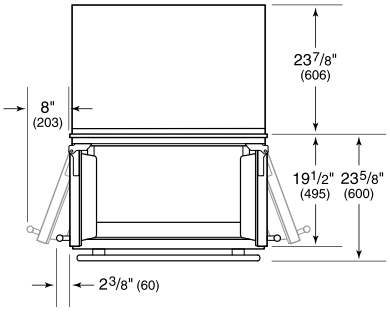

STANDARD INSTALLATION

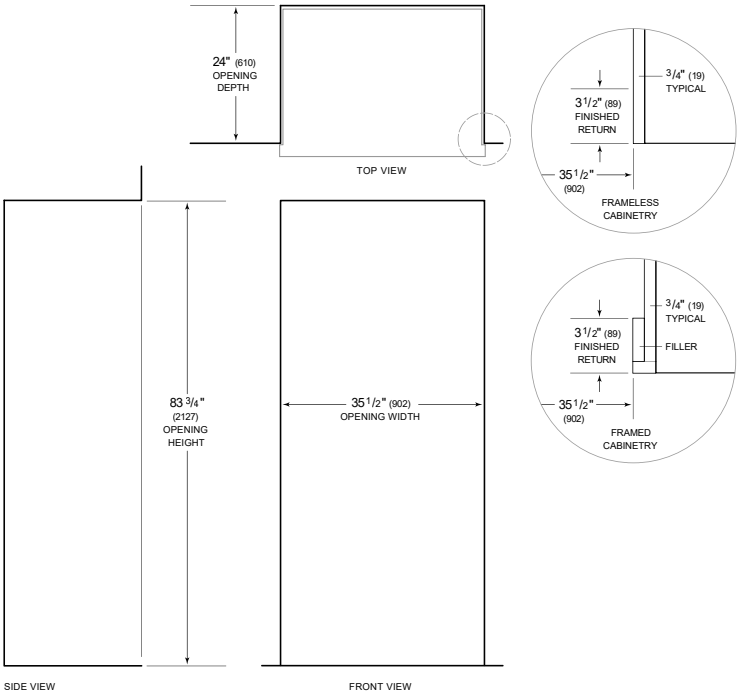

NOTE: 3 1/2" (89) finished returns will be visible and should be finished to match cabinetry
Shaded line represents profile of unit.