LEGACY MODEL - 42" CLASSIC SIDE-BY-SIDE REFRIGERATOR/FREEZER WITH INTERNAL DISPENSER - PANEL READY

BI-42SID/O

FEATURES

- Monitor and control remotely with Wi-Fi connectivity
- Accepts custom panels for an integrated look within cabinetry or stainless-steel accessory panels and handles to match other Sub-Zero, Wolf, and Cove products*
- Preserves refrigerated foods with cool, moist air and frozen foods with frigid, dry air
- Fight spoilage and odors with a NASA-inspired air purification system
- Locks in cold air to ensure freshness with magnetic door seals
- Keeps produce fresher with high-humidity, sealed crisper and deli drawers
- Controls temperature within one degree of setpoint
- Filters water and ice, removing contaminants, chlorine taste, and odor
- Delivers fresh, filtered water through an internal dispenser located discreetly within the refrigerator
- Yields ice automatically and “max ice” for additional production
- Ensures excellent visibility with bright lights
- Refer to freshness cards for tips on food preservation, use, and care

ACCESSORIES

- 90° Door Stop
- Air Purification Cartridge
- Custom Side Panel Mounting Kit
- Egg Container
- Legacy 42" Stainless Steel Kickplate
- Legacy Custom Front Panel Mounting Kit
- Legacy Grille Frame - 84"
- Legacy Pro Louvered Flush Inset Grille - 84"
- Legacy Stainless Steel Flush Inset Freezer Door Panel with Pro Handle
- Legacy Stainless Steel Flush Inset Grille Panel
- Legacy Stainless Steel Flush Inset Refrigerator Door Panel with Pro Handle
- Legacy Stainless Steel Flush Inset Refrigerator Door Panel with Tubular Handle
- Legacy Stainless Steel Pro Louvered Grille - 84"
- Legacy Stainless Steel Side Panel
- Water Filter
- Water Filter
- White Side Panel
- Flush Inset Installation Accessories
- Framed Installation Accessories
- Classic Overlay or Flush Inset Grille Frames

HANDLE ACCESSORIES

PRO

TUBULAR

PRODUCT DETAILS

REFRIGERATOR

- 1 adjustable dairy compartment
- 1 high-humidity crisper drawer with adjustable dividers
- 2 refrigerator storage drawers with adjustable dividers
- 5 glass refrigerator shelves (4 adjustable; 1 stationary)
- 5 refrigerator door bins (3 adjustable; 2 stationary)
- Internal water dispenser
- LED refrigerator and freezer lights

FREEZER

- 2 adjustable wire shelves
- 1 stationary solid shelf
- 3 storage drawers
- 5 adjustable door bins
- Automatic ice maker

Classic Louvered Grilles

Accessories are available through an authorized dealer.
For local dealer information, visit subzero-wolf.com/locator.

Specifications are subject to change without notice. This information was generated on April 24, 2024. Verify specifications prior to finalizing your cabinetry/enclosures.

LEGACY MODEL - 42" CLASSIC SIDE-BY-SIDE REFRIGERATOR/FREEZER WITH INTERNAL DISPENSER - PANEL READY

PRODUCT SPECIFICATIONS

Model	BI-42SID/O
Dimensions	42"W x 84"H x 24"D
Refrigerator Capacity	15.8 cu. ft.
Freezer Capacity	7.9 cu. ft.
Electrical Supply	115 VAC, 60 Hz
Electrical Service	15 amp dedicated circuit
Plumbing Supply	1/4" OD copper, braided stainless steel or PEX tubing
Plumbing Pressure	35–120 psi
Receptacle	3-prong grounding-type

ELECTRICAL

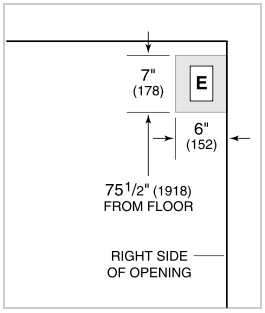

PLUMBING

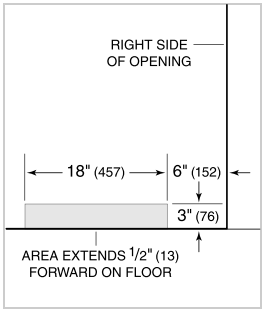

PANEL SPECIFICATIONS For complete panels specifications including width/height, weight requirements, thickness requirements and offset details visit subzero-wolf.com/builtinconfigurator.

NOTE: Dimensions in parenthesis are in millimeters unless otherwise specified

INTERIOR VIEW

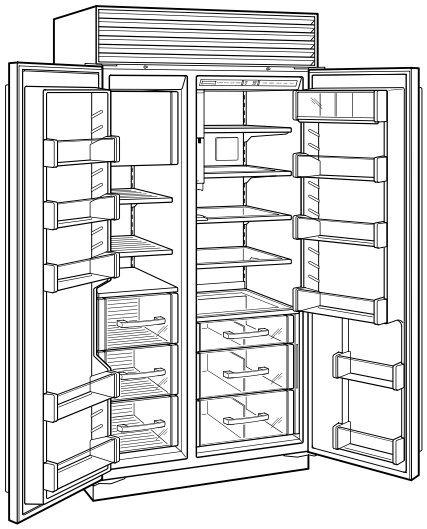

This illustration is intended for interior reference only and may not represent the exterior of the model being specified.

DIMENSIONS

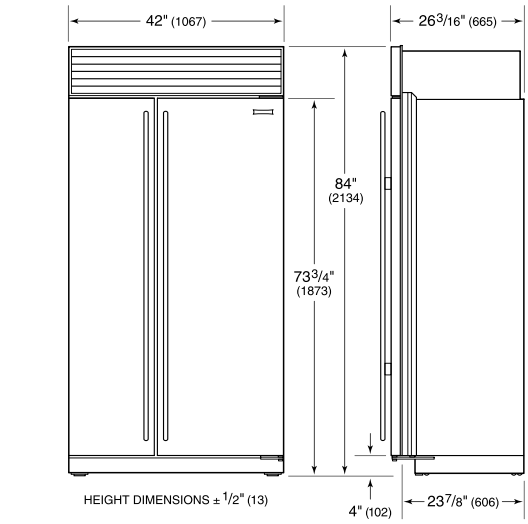

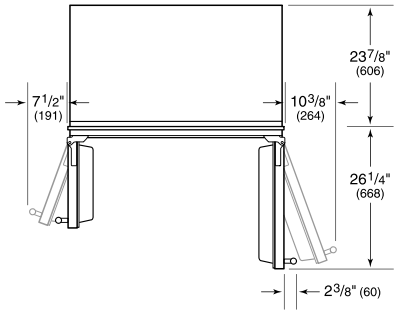

STANDARD INSTALLATION

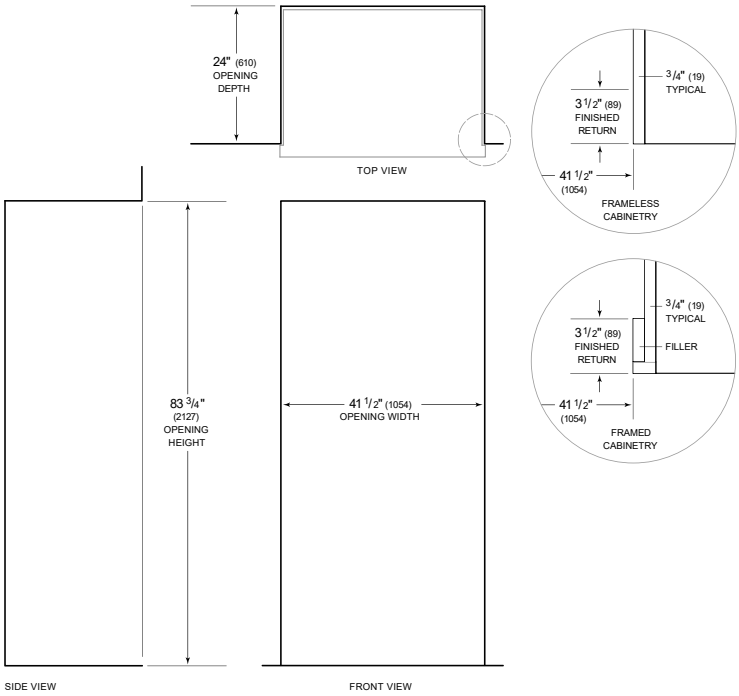

NOTE: 3 1/2" (89) finished returns will be visible and should be finished to match cabinetry
Shaded line represents profile of unit.