30” M SERIES CONTEMPORARY BLACK GLASS CONVECTION STEAM OVEN WITH RETRACTABLE HANDLE

CSO30CM/B

FEATURES

Detects the volume, shape, and consistency of your food with a climate sensor that adjusts time (you can even delay the start for when you want your dish ready), temperature, and humidity for guesswork-free delicious results, every time

Features space enough to cook multiple dishes at once (or a 15-lb turkey)

Insert a temperature probe to tell you exactly when it is done—and in Gourmet Mode, it will alert you the moment the dish is ready.

Provides an extraordinary 90 minutes of steam cooking with an easy-access water tank

Enjoy the clean look of black glass and contemporary design

Integrates beautifully into surrounding cabinetry with flush installation

Master your technique with tips and recipes from the Master the Convection Steam Oven guide

ACCESSORIES

Descaling Solution

Full Extension Rack Guides

Perforated Pan - 12 3/4" x 1 1/2" x 7"

Perforated Pan - 12 3/4" x 2 1/2" x 7" - Legacy

Perforated Pan - 17 3/4" x 1 1/4" x 15" - Legacy

Porcelain Baking Sheet

Porcelain Baking Sheet

Solid Pan - 12 3/4" x 1 1/2" x 7"

Solid Pan - 12 3/4" x 1 1/4" x 14" - Legacy

Solid Pan - 17 3/4" x 1 1/4" x 15" - Legacy

Standard Oven Rack - Legacy

Accessories available through an authorized dealer.
For local dealer information, visit subzero-wolf.com/locator.

Specifications are subject to change without notice. This information was generated on October 12, 2024. Verify specifications prior to finalizing your cabinetry/enclosures.

30” M SERIES CONTEMPORARY BLACK GLASS CONVECTION STEAM OVEN WITH RETRACTABLE HANDLE

PRODUCT SPECIFICATIONS

Model	CSO30CM/B
Dimensions	29 7/8"W x 17 7/8"H x 21 1/2"D
Oven Interior Dimensions	17 7/8"W x 11"H x 15 3/4"D
Overall Capacity	1.8 cu. ft.
Door Clearance	14 3/16"
Weight	91 lbs
Electrical Supply	240/208 VAC, 60 Hz
Electrical Service	20 amp dedicated circuit
Power Cord Length	6 Feet
Receptacle	NEMA 6-20R grounding-type

ELECTRICAL

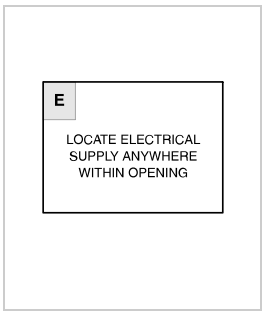

NOTE: Dimensions in parenthesis are in millimeters unless otherwise specified

DIMENSIONS

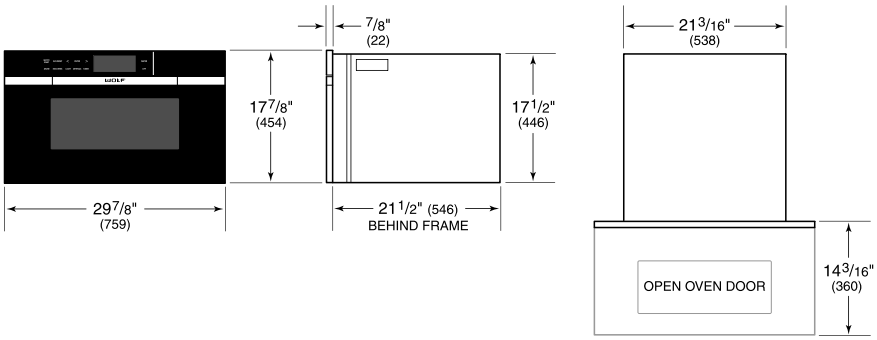

STANDARD INSTALLATION

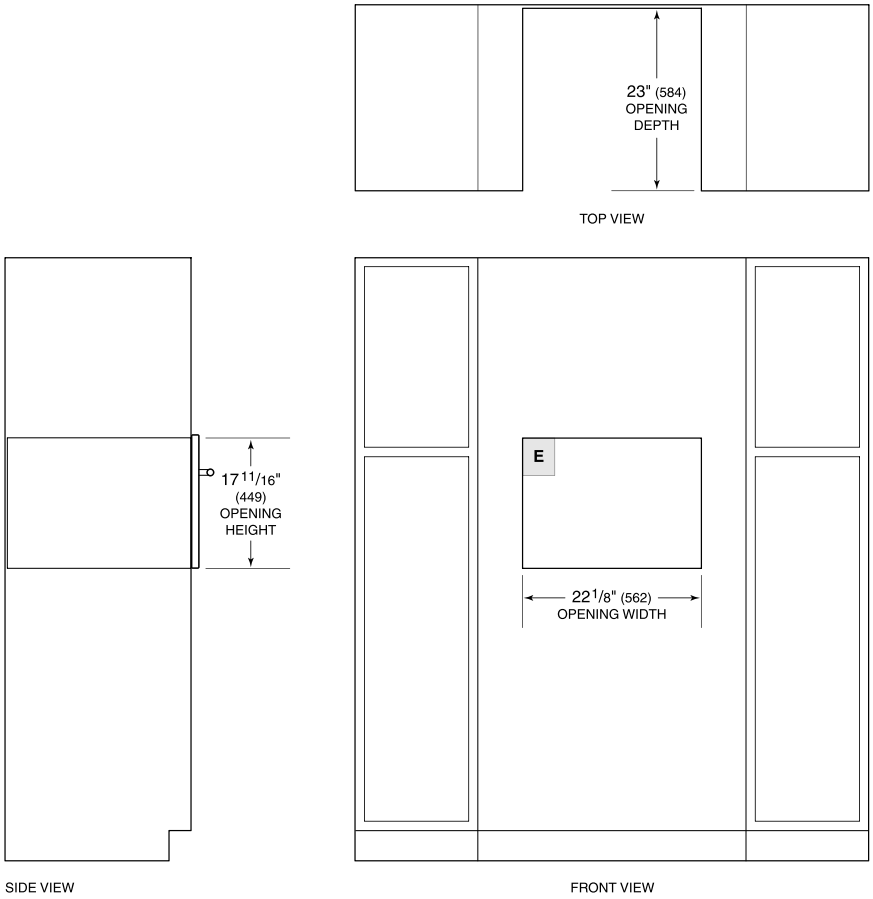

NOTE: 24" (610) and 30" (762) models require the same opening dimensions.