36" DUAL FUEL RANGE - 4 BURNERS AND INFRARED GRIDDLE

DF36450G/S/P

FEATURES

Patented dual-stacked, sealed burners offer precise temperature adjustment

Wolf's Dual VertiFlow™ convection system provides reliably even heat, reduces hot and cold spots, and enables consistent multi-rack cooking

Gourmet Mode features nearly 50 presets that automatically control the oven to ensure delicious results

Take the guesswork out of cooking with 10 chef-created cooking modes, including Bake, Broil, Convection, Convection Roast, Dehydrate, Gourmet, Proof, Roast, Stone, and Warm

The redesigned 15,000 Btu griddle features even, precise heat, handling breakfast with equal finesse as seared proteins and stir-fried vegetables

Burners produce up to 20,000 Btu for fast boils and intense sears and as low as 300 Btu for true simmers and melts

For improved temperature control and safety, the spark ignition system reignites burners automatically

The full-color touchscreen is intuitive and easy to read, discreetly hiding away when not in use

LED backlit control bezels illuminate when in use, indicating which burners are active

The oven offers self-clean, delayed start, timed cook, and Sabbath features

The temperature probe alerts you when your dish has reached the desired temperature

Control your range from wherever you are using our convenient Owner's App—remotely preheat, adjust temperatures, select modes, and more

ACCESSORIES

11" Cutting Board

2-Burner Wok Grate

36" Dehydration Rack Set

36" Dual Fuel Brushed Brass Bezel Kit

36" Full-extension ball-bearing oven rack

36" Standard Oven Rack

Bake Stone Kit

Filler Trim

Griddle Cleaning Kit

Griddle Cleaning Pads

Griddle Cleaning Solution

Temperature Probe

Red, black, brushed stainless, brushed brass, and brushed gray knob kits

Rear Caster Covers

Front Leg Extension Covers

Stainless Steel Kickplates

KNOB OPTIONS

TOP CONFIGURATION

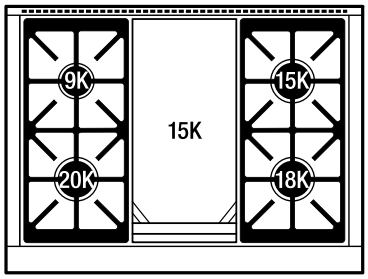

RANGETOP SPECIFICATIONS

- 1 - 9,200 Btu burner
- 1 - 15,000 Btu burner
- 1 - 18,000 Btu burner
- 1 - 20,000 Btu burner
- 1 - 15,000 Btu (14,000 Btu LP) griddle
- Stainless-steel griddle cover
- Stainless-steel island trim

5" and 10" stainless steel risers, and 20" riser with shelf

Accessories available through an authorized dealer.
For local dealer information, visit subzero-wolf.com/locator.

Specifications are subject to change without notice. This information was generated on April 25, 2024. Verify specifications prior to finalizing your cabinetry/enclosures.

36" DUAL FUEL RANGE - 4 BURNERS AND INFRARED GRIDDLE

PRODUCT SPECIFICATIONS

Model	DF36450G/S/P
Dimensions	35 7/8"W x 36 1/2"H x 29 1/2"D
Oven 1 Interior Dimensions	31 1/4"W x 17 1/2"H x 20"D
Oven 1 Usable Capacity	4.1 cu. ft.
Oven 1 Overall Capacity	6.3 cu. ft.
Door Clearance	21"
Electrical Supply	240/208 VAC, 60 Hz
Electrical Service	30 amp dedicated circuit
Gas Supply	3/4" ID line
Gas Inlet	1/2" NPT female

ELECTRICAL

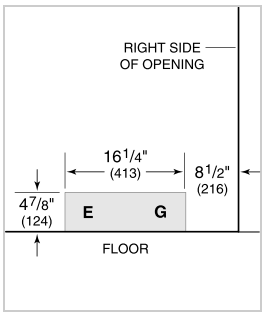

GAS

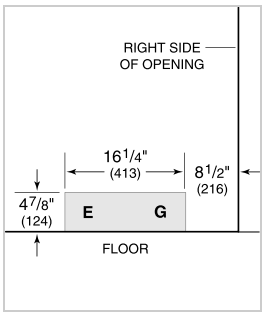

NOTE: Dimensions in parenthesis are in millimeters unless otherwise specified

DIMENSIONS

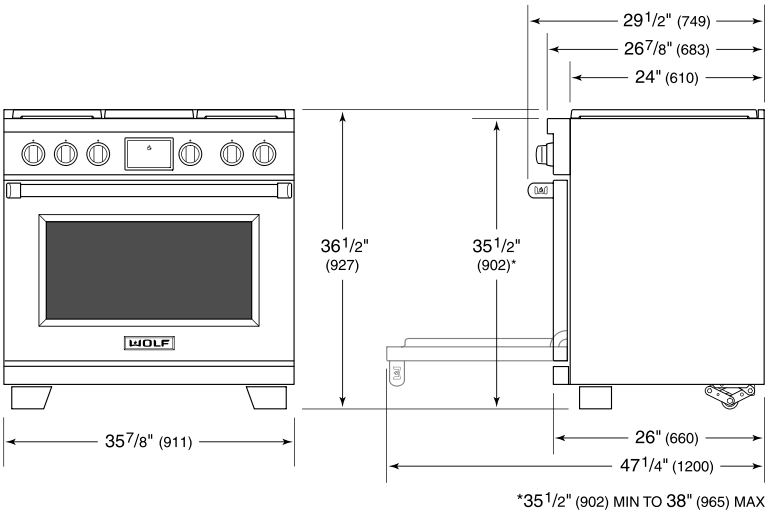

STANDARD INSTALLATION

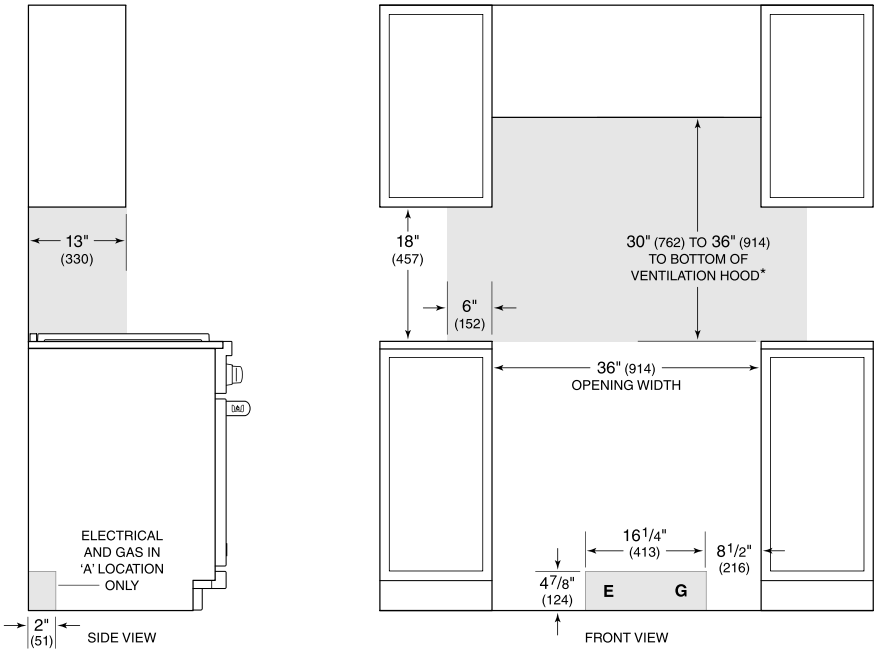

**Without ventilation hood, 36" (914) minimum clearance countertop to combustible materials, 44" (1118) for charbroiler.*

NOTE: Shaded area above countertop indicates minimum clearance to combustible surfaces, combustible materials cannot be located within this area.
For island installation, 12" (305) minimum clearance back of range to combustible rear wall above countertop.