# 36" TRANSITIONAL FRAMED INDUCTION COOKTOP

CI365TF/S

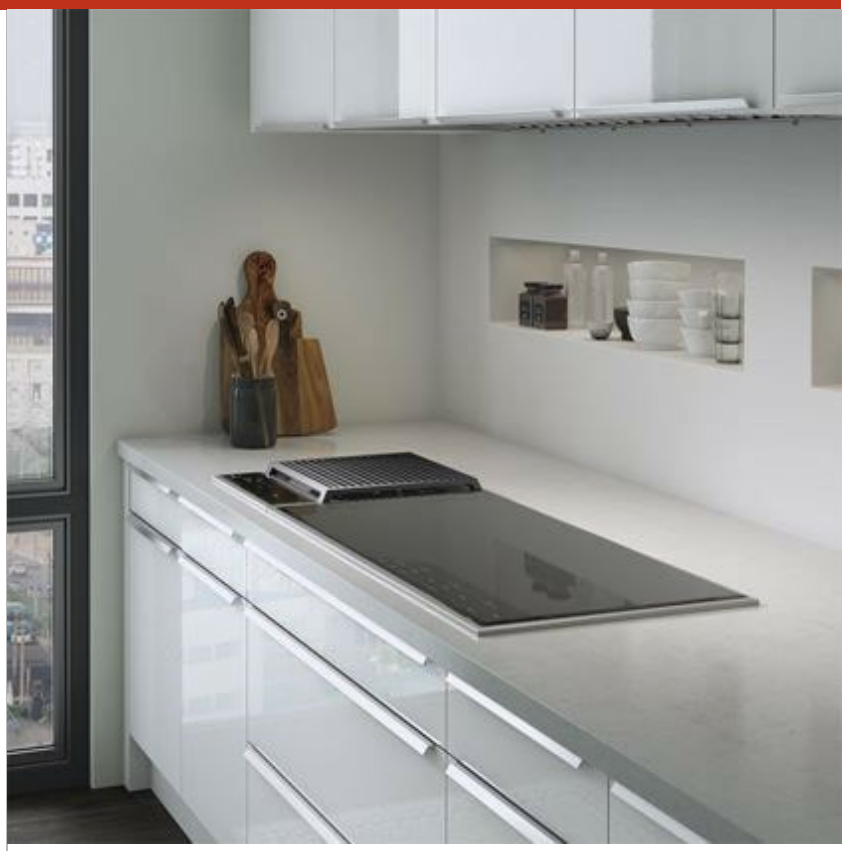

## FEATURES

- Distributes heat more evenly with 40 percent faster temperature response than gas or electric
- Transfers heat more efficiently because the energy is supplied directly to the cookware
- Enjoy cooking with lightning-fast highs and subtle lows
- Pair our slim 15" width with other Wolf modules for an integrated design
- The Bridge function joins two induction zones into one large area, enabling use of an induction-capable griddle, open roaster, or fish poacher
- Promote safer and easier cooking with cookware sensing guards
- Cleanup is a snap with the black ceramic glass surface
- Enjoy the illuminated touch controls and convenient lock feature

## ACCESSORIES

- Cooktop/Module Filler Strip
- Cooktop/Module Filler Strip for Downdrafts

Accessories available through an authorized dealer.
For local dealer information, visit subzero-wolf.com/locator.

## COOKTOP SPECIFICATIONS

- Brushed stainless trim
- Black ceramic glass surface
- True simmer and melt settings
- Boost Mode for high heat
- 2 - 2,100 W element
- 2 - 2,100 W Element with 3,700 W Boost
- 1 - 2,600 W element with 3,700 W boost

Specifications are subject to change without notice. This information was generated on April 16, 2024. Verify specifications prior to finalizing your cabinetry/enclosures.

# 36" TRANSITIONAL FRAMED INDUCTION COOKTOP

## PRODUCT SPECIFICATIONS

| | |
|---|---|
| Model | CI365TF/S |
| Dimensions | 36"W x 2"H x 21"D |
| Weight | 61 lbs |
| Electrical Supply | 3-wire, 240/208 VAC, 60 Hz |
| Electrical Service | 50 amp dedicated circuit |
| Conduit Length | 4 Feet |

## ELECTRICAL

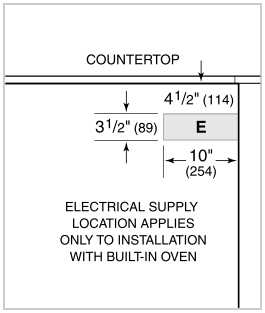


**NOTE:** Dimensions in parenthesis are in millimeters unless otherwise specified

## DIMENSIONS

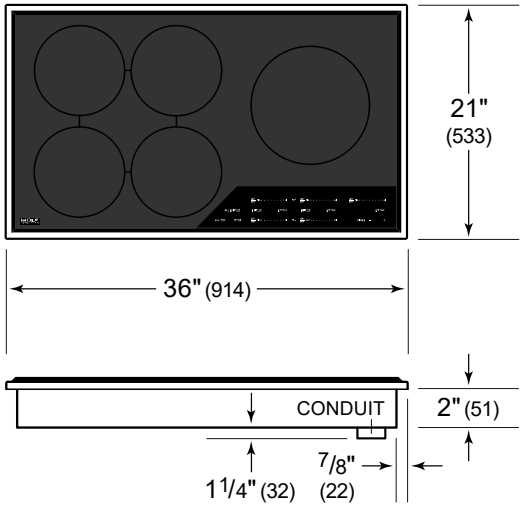


## STANDARD INSTALLATION

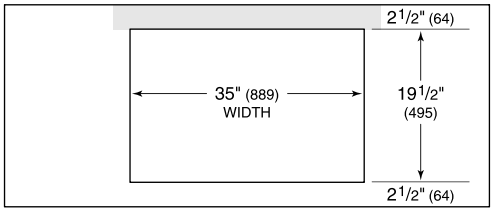


COUNTERTOP CUT-OUT

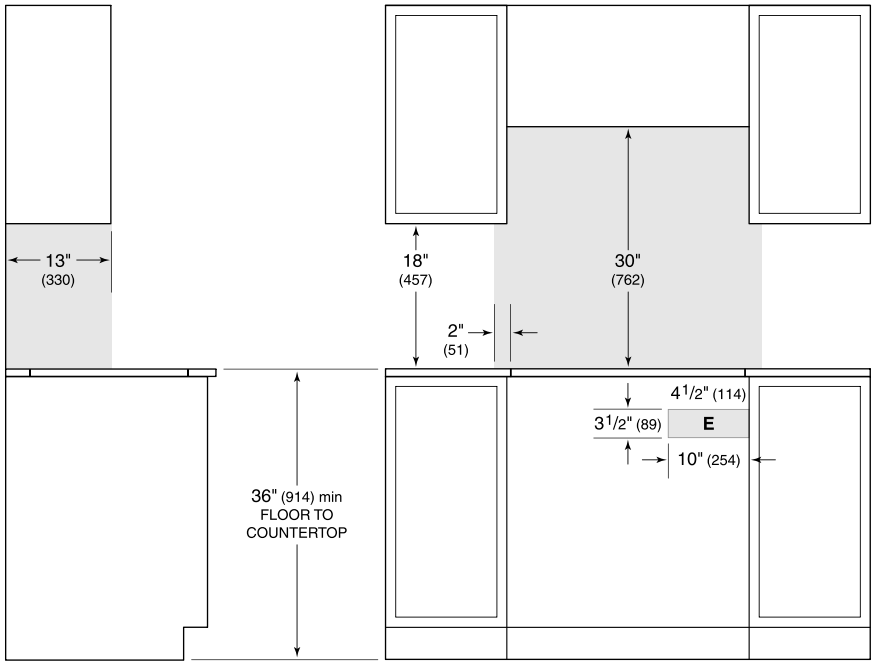


SIDE VIEW FRONT VIEW

*NOTE: Shaded area above countertop indicates minimum clearance to combustible surfaces, combustible materials cannot be located within this area.*
*Electrical supply location only applies to installations with built-in oven.*